slimline warehouse

Digital Kiosk

USER MANUAL

Models: 43", 55" , 65"

SKU: DGRTA43, DGRTB55, DGRTC65

Thank you for purchasing this product from Slimline Warehouse

It's our mission to help you connect with the world and build your brand with products that are personalized to your needs.

Your product has been manufactured with great care using only the finest quality materials and expert workmanship. Our Quality Assurance team inspects all electronics during assembly process to assure reliable operation.

Need assistance? We are available for expert advice and all of your customer service needs.

We're Here To Assist

slimline warehouse
slimlinewarehouse.com.au

1300 658 808

support@slimlinewarehouse.com.au

TABLE OF CONTENTS

BEFORE USE

Safety Warnings and Precautions	4/5
Packing List	6
Parts Diagram	7
Assembly	8

OPERATION

Power On/Off	9
Remote Control	9
Menu Navigation	10
Quick Start Guide	10/11

REFERENCE

Technical Specifications	12
Cleaning and Maintenance	13
Troubleshooting Guide	14

BEFORE USE

Safety Warnings and Precautions

- Cut off the power supply before connecting or disconnecting any cables.
- Do not place the Digital Signage on any instable positions, or else it may be damaged or cause fire.
- Do not place the Digital Signage in the positions such as:

  •The environment subject to direct strong sunlight, moisture, extreme temperature or too much dust,

  • The environment with flammable or explosive materials,

  • The environment with flammable or corrosive gases,
- Do not use damaged or inappropriate power outlets, and ensure that the plugs and outlets contact properly.
- Do not let dust or metal deposits adhere to the plugs and outlets.
- Do not damage the power cords.
- Do not modify the power cords.
- Do not place heavy objects on the power cords.
- Keep the power cords away from heat source.
- Do not pull the cord to remove the plug.
- Do not connect too many plugs to one outlet in parallel, or else it may cause fire due to excessive power consumption.
- Do not approach the Digital Signage with open flame (e.g. a lighted candle), or else it may cause electric shock or fire.
- Do not put any sharp objects, metal or liquid into the vents or let them touch the signal terminals to avoid short circuit, product damage, and electric shock.
- The openings in the enclosure are designed for ventilation and cooling, to ensure long time reliable running of components inside the enclosure and prevent overheating. Do not block the openings when place the unit.
- Do not touch the plugs with wet fingers, or else it will cause electric shock.
  Do not use the Digital Signage in stormy weather, especially when there is lightning, instead, please disconnect the power and antenna plugs to avoid lightning strike.
- Do not disassemble the Digital Signage without permission, or else it may cause electric shock or fire. Please ask qualified technician for repair.

Safety Warnings and Precautions (Cont'd)

- Do not let children climb onto the Digital Signage.
- Keep the small parts away from children to prevent them from swallowing.
- If the Digital Signage won't be used for a long time, please turn it off and pull out the power plug.
- To adjust the position of the Digital Signage, please disconnect all power cords and move slowly to avoid tip over.
- Do not scratch or knock the LCD with hard object, or twist and squeeze the LCD.
- Do not turn on the unit immediately when it is moved from a place with low temperature to high temperature, or else it will cause condensation and malfunction.
- Before cleaning the Digital Signage, please pull out the power plug, wipe with soft cloth, do not use industrial chemicals, prevent foreign matters from entering the machine. Improper cleaning (such as cleaning solution, water) may damage the product, erase the printed information, and even cause damage of the components if fluid flows in, resulting in machine failure.
- If the unit displays the same screen for a long time or the moving picture has fixed text or icon, it will leave ghosting on the screen and won't disappear when the unit is turned off, it is normal and isn't covered by the warranty.
- The power of the Digital Signage can be cut off by pulling out the plug.
- If the LCD screen ruptures and the liquid splashes on the skin, please rinse for 15 minutes with clean water immediately, and consult your doctor.
- To carry the Digital Signage with hands, please grab and hold the edges, do not apply pressure on the panel.
- Use the Digital Signage properly: Use in proper lighting conditions, insufficient lighting or long time watching will impair your eyesight.
- Unplug device to disconnect from power.
- Insert the plug into the outlet properly, or else it may cause sparks and fire.
  The unit is a class-A-product, which may cause radio interference in living environment. In this case, please take feasible measures and use power plug as the disconnection device.
- The technical specifications printed herein and on the packaging are subject to change without prior notice. The Manual may be slightly different from actual operation, and the latter is applicable.

If you have any questions regarding our products, please visit us at www.slimlinewarehouse.com.au or contact customer service on 1300 658 808.

Packing List

ACCESSORY	PHOTO / REFRENCE	QTY	ACCESSORY	PHOTO / REFRENCE	QTY
Remote Control		1	Screws for Wheels (4 per wheel)		16
Set of Keys for Inspection Door		1	Antenna		1
Allen Key		1	User Manual	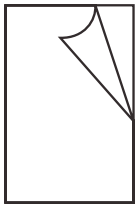	1
Wheels		4	Power Cord		1
Allen Bolts for Base		6			1

* Images above are for illustration purposes and may differ from actual product.

Parts Diagram

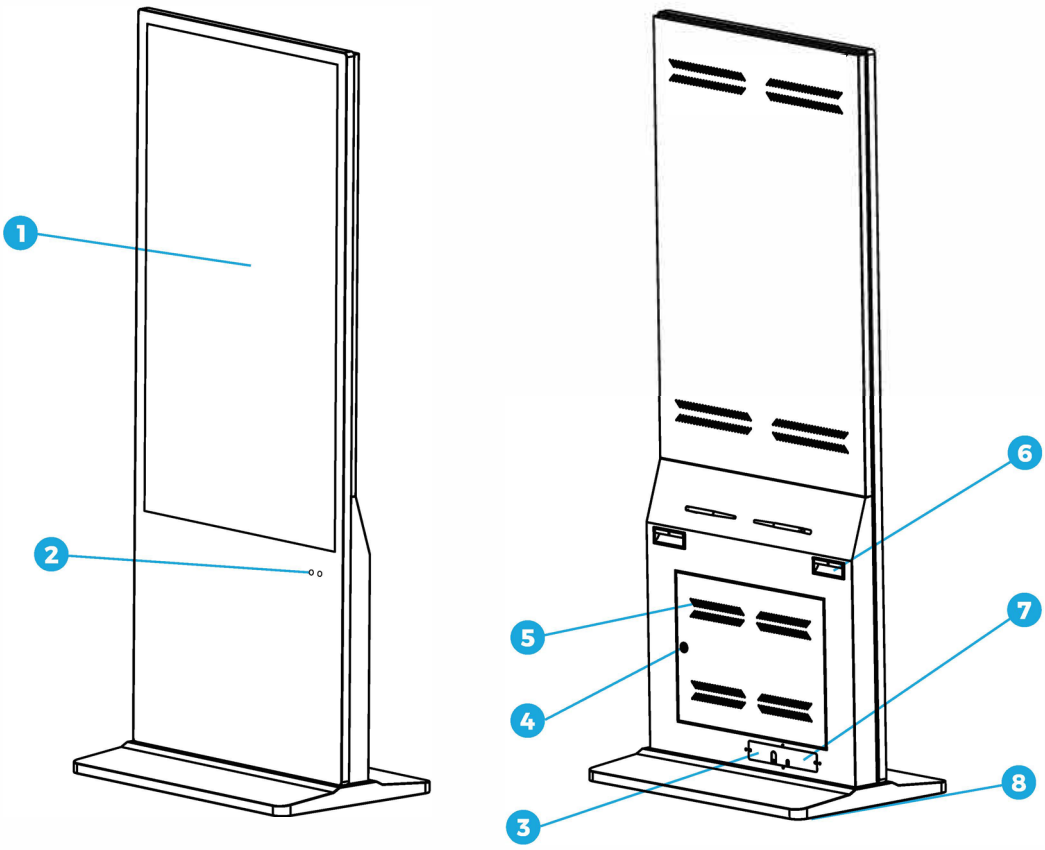

1 LCD Screen

2 Remote Sensor

3 Ports

4 Lock

5 Speakers

6 Handle

7 On/Off Switch

8 Wheels

Port interface Diagram

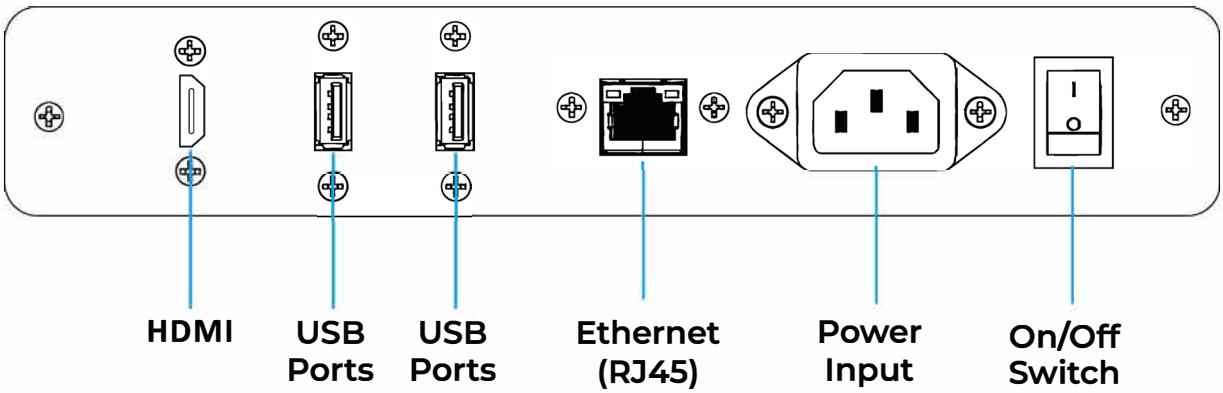

Assembly

CAUTION: 2 People required to safely assemble unit

2 PEOPLE REQUIRED FOR UNPACKING

The following guide is for the assembly of base and wheels.

1. Attach base to totem. Screw in the 8 Allen Bolts to fix the totem and base together

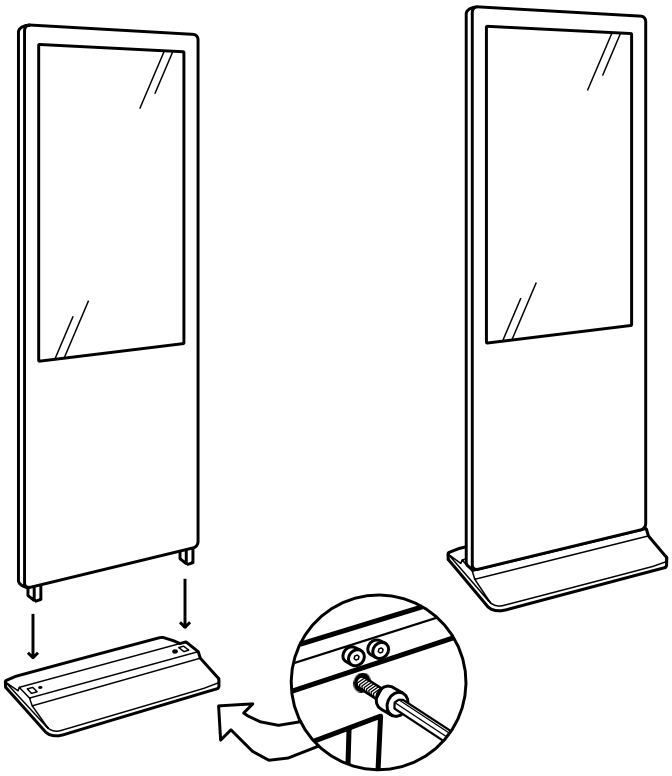

2. Have one person assist by tipping the unit on its side, exposing the base.

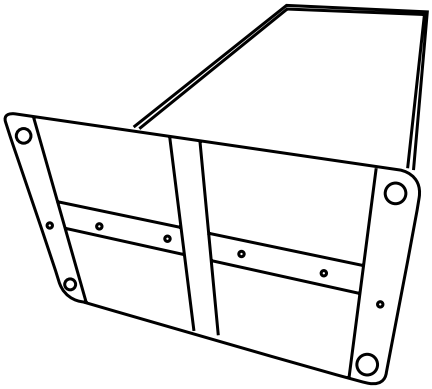

3. Attach each of the 4 castor wheels using the supplied bolts (4 bolts per wheel)

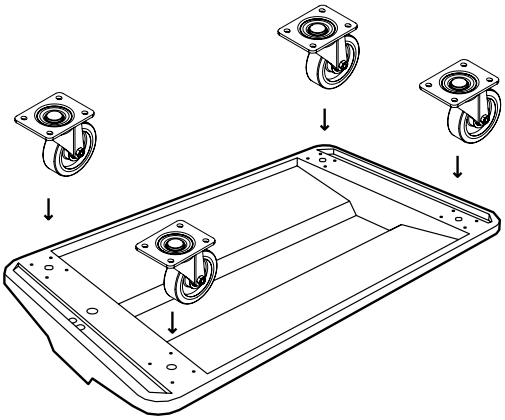

OPERATION

Power On/Off

- Start up by inserting the power cord into unit and connecting to outlet. Flip power switch to ON.
- Power on or off the screen, press the power button on the remote control.
- To shut down, press the power button on the remote control, then flip power switch to OFF.

  The power indicator light turns green when the unit is on. When the unit is in standby mode, the light turns red.

Remote Control

To control the unit, aim the remote control directly at the remote sensor, located on the front of the unit. The remote sensor indicator (IR) light on the front flashes when receiving a remote signal.

For best performance, bring the remote control close to the sensor and avoid placing objects between the remote control and the sensor or exposing the sensor window to direct sunlight. See the remote control diagram on right.

NOTE: The remote requires 2 AAA batteries, not included.

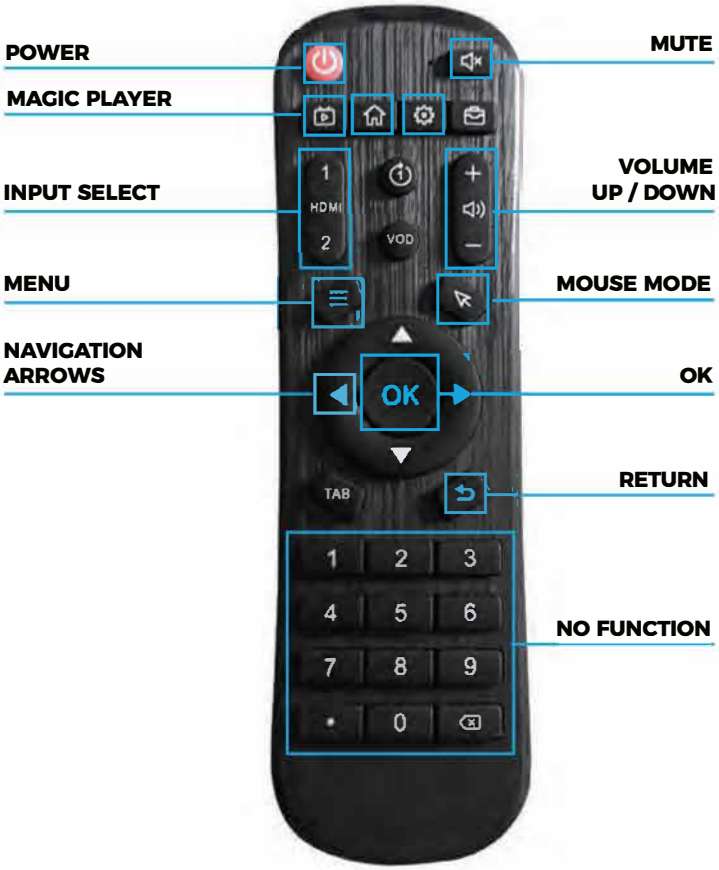

NOTE: ABOVE IMAGE FOR ILLUSTRATION PURPOSES ONLY

NOTE: Only the buttons listed have supported function.
For alternate navigation options, we recommend connecting an external mouse and keyboard via usb ports.

Menu Navigation

The home screen of the operating system includes the navigation bar and the App Drawer. The app drawer is a feature on Android operating systems that provides a central, organized location to view and launch all installed apps.

NOTE: The navigation bar can be minimized. To restore the navigation bar, go into Display settings and enable/disable Display Navigation.

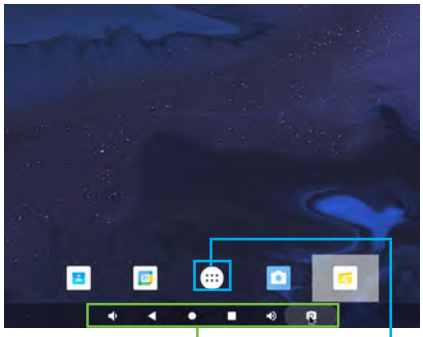

App Drawer
When selected displays all apps installed on device

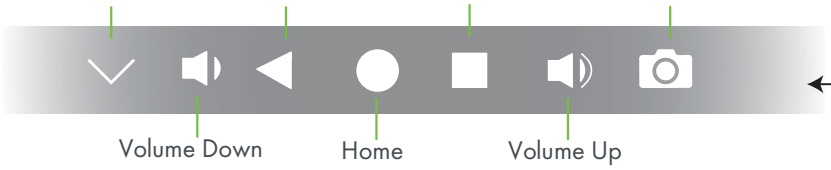

Navigation Ba r
Enlarged view left

Quick Start Guide

The most convenient way to display content on your digital display is to use the pre installed app titled "Magic Player" in USB ("Stand mode". if the app does not load when the device is turned on, the app can be found amongst the list of apps in the app drawer.

If a program is available for playback, either from the device's storage or a connected USB stick, it will start playing automatically. However, if no program is available, the home screen will remain displayed, waiting for further action. Before running digital content, please ensure the player is set to USB mode if this is the preffered method of operation.

NOTE: For more advanced operation features, such as operating via Wi-Fi with remote devices, please contact our customer support team.

Example of Magic Player app home screen

Quick Start Guide (Cont'd)

To ensure you have Magic Player set to USB mode, please follow these steps;

1. Select the app drawer on the home screen, and select the "Magic Player" app

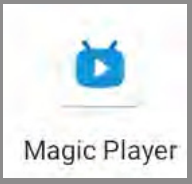

2. Using the menu button on your remote. The Magic Player menu will be displayed

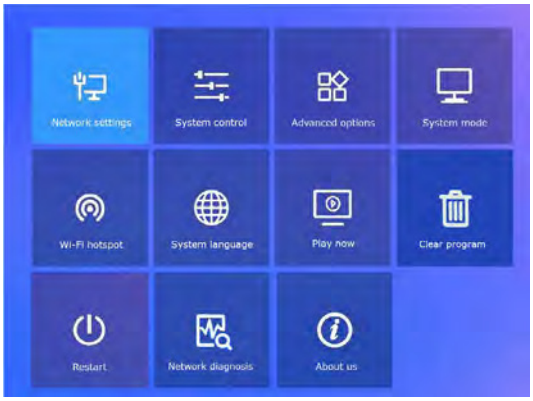

Magic Player settings

3. Select System mode
   Then select "Stand-alone"

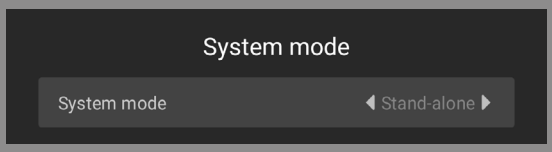

4. Select save, return to the menu screen, and plug in USB

5. Restart the device by selecting restart. Once start up is complete, the software should make a copy of the content on the usb and play automatically.

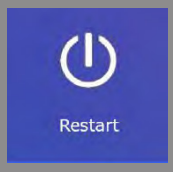

Technical Specifications

	43 Inch	55 Inch	65 Inch
LCD Size	43	55	65
Light Source	Backlight (LED)	Backlight (LED)	Backlight (LED)
Resolution	1920 x 1080 (FHD)	1920 x 1080	3840 x 2160
Brightness	400 Nits (Typical)	400 Nits (Typical)	400 Nits (Typical)
Contrast	1200:1	1200:1	1200:1
Response	8ms	8ms	8ms
Pixel Pitch	0.49005×0.49005 mm	0.49005×0.49005 mm	0.49005×0.49005 mm
Refresh Rate	50/60Hz	50/60Hz	50/60Hz
Viewing Angle	178/178	178/178	178/178
Colour Saturation	72%	72%	72%
Display Colours	16.7M	16.7M	16.7M
Viewable Area	940.2(H)x 529(V)	1209.6 (H) x 680.4(V)	1428.5(H) x 803.5(V)
Voltage	24V / AC110 - 240V, 50 / 60HZ	24V / AC110 - 240V, 50 / 60HZ	24V / AC110 - 240V, 50 / 60HZ
Input Voltage	50 / 60HZ	50 / 60HZ	50 / 60HZ
Power Consumption	About 55W	About 76W	About 76W
Operating Temperature	0 - 40˚C	0 - 40˚C	0 - 40˚C
Storage Temperature	0˚ - 50˚C	-10˚ - 60˚C	-10˚ - 60˚C
Operating Humidity	20% RH to 85% RH	20% RH to 85% RH	20% RH to 85% RH
Storage Humidity	10% RH to 90% RH	10% RH to 90% RH	10% RH to 90% RH
Maximum OperatingTime	7 x 18Hrs	7 x 18Hrs	7 x 18Hrs
Net Weight	About 33.14KG	About 45.4KG	About 58.9KG
Gross Weight	About 46KG	About 59KG	About 75KG
Unit Dimensions	1750(L) x 75(W) x 582(H)mm	1850(L) x 95(W) x 746(H)mm	1950(L) x 95(W) x 877(H)mm
Package Dimensions	1904(L) x 234(W) x 758(H)mm	2004(L) x 234(W) x 920(H)mm	2154(L) x 234(W) x 1044(H)mm
Shell Material	Steel	Steel	Steel
Shell Colour	Black	Black	Black
Operating System	Android 14	Android 14	Android 14
Processor	RK3576	RK3576	RK3576
RAM	4G	4G	4G
ROM	32G	32G	32G
Decoding Resolution	1080P	1080P	1080P
Touch Support	No	No	No
Supported Video	H.265,H.264,VP8, MAV, WMV,AVS, H.263, MP4	H.265,H.264,VP8, MAV, WMV,AVS, H.263, MP4	H.265,H.264,VP8, MAV, WMV,AVS, H.263, MP4
Supported Photo	JPG, JPEG, BMP, PNG	JPG, JPEG, BMP, PNG	JPG, JPEG, BMP, PNG
Supported Audio	MP3, WMA, WAV, APE, FLAC, AAC, OGG, M4A, 3GPP	MP3, WMA, WAV, APE, FLAC, AAC, OGG, M4A, 3GPP	MP3, WMA, WAV, APE, FLAC, AAC, OGG, M4A, 3GPP
RTC (Real-time clock)	Yes	Yes	Yes
Speakers/Watts	2 x 5W	2 x 5W	2 x 5W
Schedule Power On/Off	Yes	Yes	Yes
System Update	USB Compatible	USB Compatible	USB Compatible
App installation	Support Download and Installation	Support Download and Installation	Support Download and Installation
Bluetooth	5.0	5.0	5.0
Wi-Fi Generation	Wi-Fi 6 (Compatible with Wi-Fi 5)	Wi-Fi 6 (Compatible with Wi-Fi 5)	Wi-Fi 6 (Compatible with Wi-Fi 5)
Wi-Fi Frequency	2.4 G, 5G Dual Band	2.4 G, 5G Dual Band	2.4 G, 5G Dual Band
Ethernet	1 x RJ45	1 x RJ45	1 x RJ45
HDMI IN	1	1	1
VGA	N/A	N/A	N/A
Headset / Earphone	Audio Output x 1	Audio Output x 1	Audio Output x 1
USB	USB x 2	USB x 2	USB x 2
Wi-Fi	1	1	1
Audio	Left and right audio channel	Left and right audio channel	Left and right audio channel
OSD	English	English	English

Cleaning and Maintanence

- Avoid strong vibration or impact on the product.
- Keep the product dry to avoid possible damage by moisture.
- Don’t place the product under direct sunlight which may shorten the service life of the screen.
- Clean screen and product by using a glass cleaner.
- If the product will not be used for a long time, unplug the power cord to prevent the internal short circuit or other potential dangers.

CAUTION: Do not attempt to replace or repair circuitry yourself. Contact customer service to schedule a professional further assistance.

Troubleshooting Guide

ISSUE	PROBABLE CAUSE	SOLUTION
NO PICTURE OR SOUND	• Unit not plugged into wall outlet • Power cord not properly connected to the terminal on the back of the unit • Unit not powered on • Wall outlet not working	• Check that the unit is plugged into wall outlet. • Confirm that the power cord is connected to the terminal on the back of the unit. • Turn the on/off toggle switch located on the back of the unit. • Unplug unit, wait 20 seconds, plug unit back into outlet and try again. • Make sure that outlet is working by plugging in a different electrical device.
NO SOUND	• Volume not adjusted on the remote control • Content/Video does not have sound • Content format is not compatible • Speakers do not work	• Adjust volume using the remote control. • Confirm content file is one of the compatible audio or video file formats (see technical specifications). • If unit is connected to Wi-Fi, use a test video such as those on YouTube and play video that has sound. • Unplug unit, wait 20 seconds, plug unit back into outlet and try again. • Try playing the content on a different device (smart phone, computer or tablet).
NO PICTURE	• Content file damaged • Content format is not compatible • Screen damaged or defective	• Confirm content is one of the following compatible formats: AVI, MPEG4, WMV,MKV, flv, MP3, MP4, MOV. • Try playing the content on a different device (smart phone, computer or tablet). • Unplug unit, wait 20 seconds, plug unit back into outlet and try again.
REMOTE CONTROL NOT WORKING	• Batteries not inserted properly • Batteries are dead • Standing too close or too far from the unit	• Check that battery is inserted properly with positive and negative orientation. • Insert new batteries. • Stand within 1 foot of the remote sensor on the side of the unit and point the remote directly at the sensor (see Remote Control instructions).
NO WI-FI SIGNAL	• Wi-Fi is not turned on in settings • Wi-Fi is not connected to a network • Low or no signal from the router • Antenna is missing or not properly attached • Damaged PC board	• Check that Wi-Fi is turned on in settings • Confirm that the antenna is correctly installed. • Check that other devices are receiving the signal. If other devices are not receiving the Wi-Fi signal, please contact your internet service provider. • Unplug or reset the router and wait for 20 seconds. Restart the router and check.
PARTS MISSING OR DAMAGED	• Parts missing from product • Parts damaged by operator	• Contact a customer service representative for parts missed during manufacturing (no charge for replacements). • Contact a customer service representative for parts lost or damaged by the customer (charge for replacements).
CANNOT UPLOAD CONTENT	• Content format is not compatible • Content files are too large • Port being used is defective • App used to play content is defective • Android board is defective	• Confirm content is one of the compatible image, video, or audio formats . Confirm file size is less than available space. • Confirm file size is less than available space.
PRE-INSTALLED APPS NOT WORKING	• Content playing software incorrectly set up • Software error • App is defective • Android board is defective	• Turn off device and boot up again • Check that file has successfully transferred from USB • Contact support for further assistance.

If the issue remains unresolved after completing all troubleshooting steps, please contact our Customer Support team for further assistance.

slimline warehouse
slimlinewarehouse.com.au
1300 658 808
support@slimlinewarehouse.com.au